CUSTOMER CORD		CUSTOMER NAME	
CUSTOMER'S APPROVAL	CUSTOMER'S BY		/ /

NO.	Revision Record	Reviser	Date
1.	△1 修改位置與尺寸	Metthew	05/09/01
2.	△2 修改FPC尺寸	Metthew	05/12/22
3.			

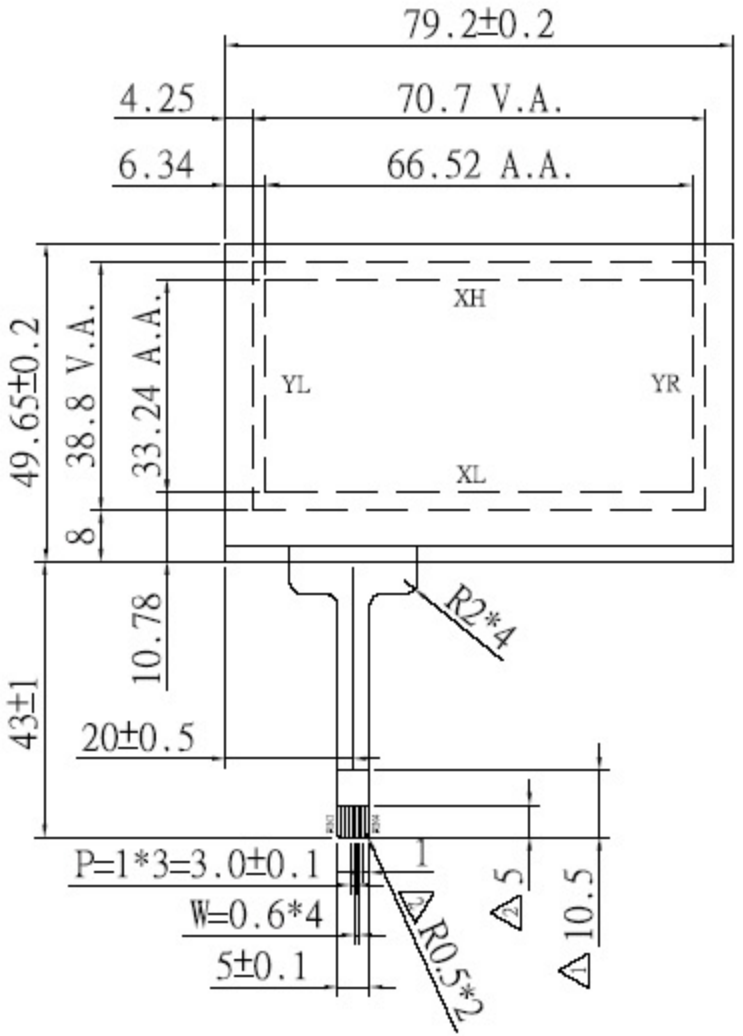

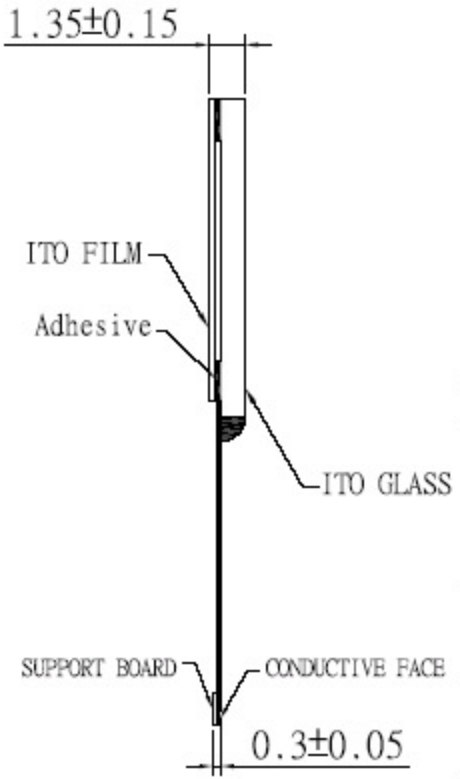

CIRCUIT DIAGRAM	PIN OUT	
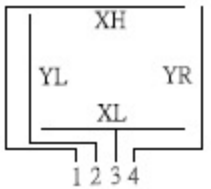	PIN	DESC
	1	XH
	2	YL
	3	XL
	4	YR

		SPECIFICATIONS	MEASURING SPEC
Optical Space	Transmittance	78% or more	Anti-Clare Type
Electrical Spec	1.Resistance between Lead	Direction"X"(Flim):200~900Ω	
		Direction"Y"(Glass):200~900Ω	
	2.Linearity	Direction"X":1.5% or less	
		Direction"Y":1.5% or less	
	3.Insulation R	20MΩ or more at DC 25V	
	4.Chattering Time	10msec or less at 100kΩpull-up	
Mechanical Spec	1.Input Method	A Special Stylus or Finger	
	2.Operating Force	Stylus:80g or less(R0.8 Polyacetal Pen)	
		Finger:80g or less(R8.0 HS40° Silicon Rubber)	
	3.Surface Hardness	3H or more(according to JIS-K5400)	
Reliability	1.High Temp Test	80°C for 240 hours in vessel	After 24 hours, measure it & satisfy Electrical Spec 1,2,3.
	2.Low Temp Test	-40°C for 240 hours in vessel	
	3.Temp&Humidity Test	60°C, 90%RH for 240 hours in vessel	
	4.Thermal Shock Test	-30°C for 60min & 80°C for 60min(20 cycles)	
Durability	1.Hand Writing Friction Resistance	Write 120000 capital in 20mmX20mm (force:250g , speed:1000characters/hour)	measure it & satisfy Electrical Spec 1,2,3.
	2.Punching Life	Punch 1000000times with R0.8silicon rubber(force:250g , speed:2/sec)	
	3.FPC Peeling Strength	400g/cm or more(peeling upward by 90° in direction of X. speed:50mm/min)	

Elucidation	總成圖	Drive Model	Analog	Approved By	蔡明樹	05 / 07 / 21
Panel Size	79.2X 49.65mm	Drive Valtage		Checked By	蔡明樹	05 / 07 / 21
Viewing Size	70.7X38.8 mm	Operating Temp	-20~60°C	Design By	X.W.H	05 / 07 / 21
Front Material/Thickness	Transparent Pet(3H)/0.188mm	Storage Temp	-40~60°C	Drawing By	X.W.H	05 / 07 / 21
Rear Material/Thickness	Glass / 1.1mm	Connector	FPC(Polymide)	Data Reserve	D:\DWG\PQ070XRA\PQ070XRA.DWG	

www.FindLCD.com
Gemini Technology Co., Ltd.
Tel : 031-455-3200. Fax: 031-429-7097

Sheet	1/1	Tolerance	±0.2	Unit	mm
Size	A4	Angles	±0.5°	Scale	

Pro (3)

Model Number: PQ070XRA

Drawing Number: PQ070XRA03