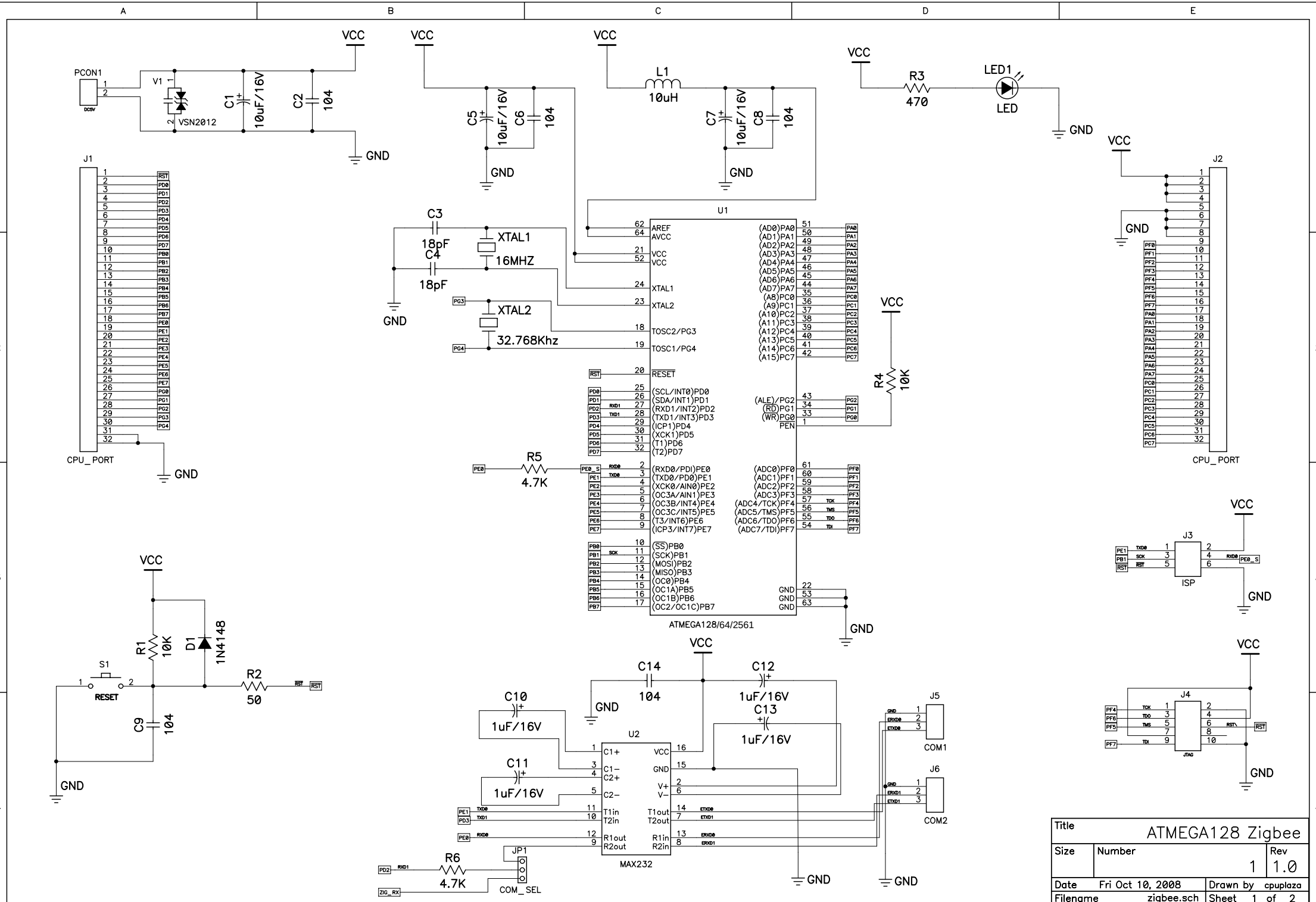
PCON1
DC5V
V1
VSN2012
C1
10uF/16V
C2
104
VCC
GND
C5
10uF/16V
C6
104
L1
10uH
C7
10uF/16V
C8
104
R3
470
LED1
LED
J1
CPU_PORT
J2
CPU_PORT
C3
18pF
C4
18pF
XTAL1
16MHZ
XTAL2
32.768Khz
U1
ATMEGA128/64/2561
R4
10K
R5
4.7K
J3
ISP
J4
JTAG
S1
RESET
R1
10K
D1
1N4148
R2
50
C9
104
C14
104
C12
1uF/16V
C13
1uF/16V
C10
1uF/16V
C11
1uF/16V
U2
MAX232
J5
COM1
J6
COM2
JP1
COM_SEL
R6
4.7K
Title
ATMEGA128 Zigbee
Size
Number
1
Rev
1.0
Date
Fri Oct 10, 2008
Drawn by
cpuplaza
Filename
zigbee.sch
Sheet 1 of 2

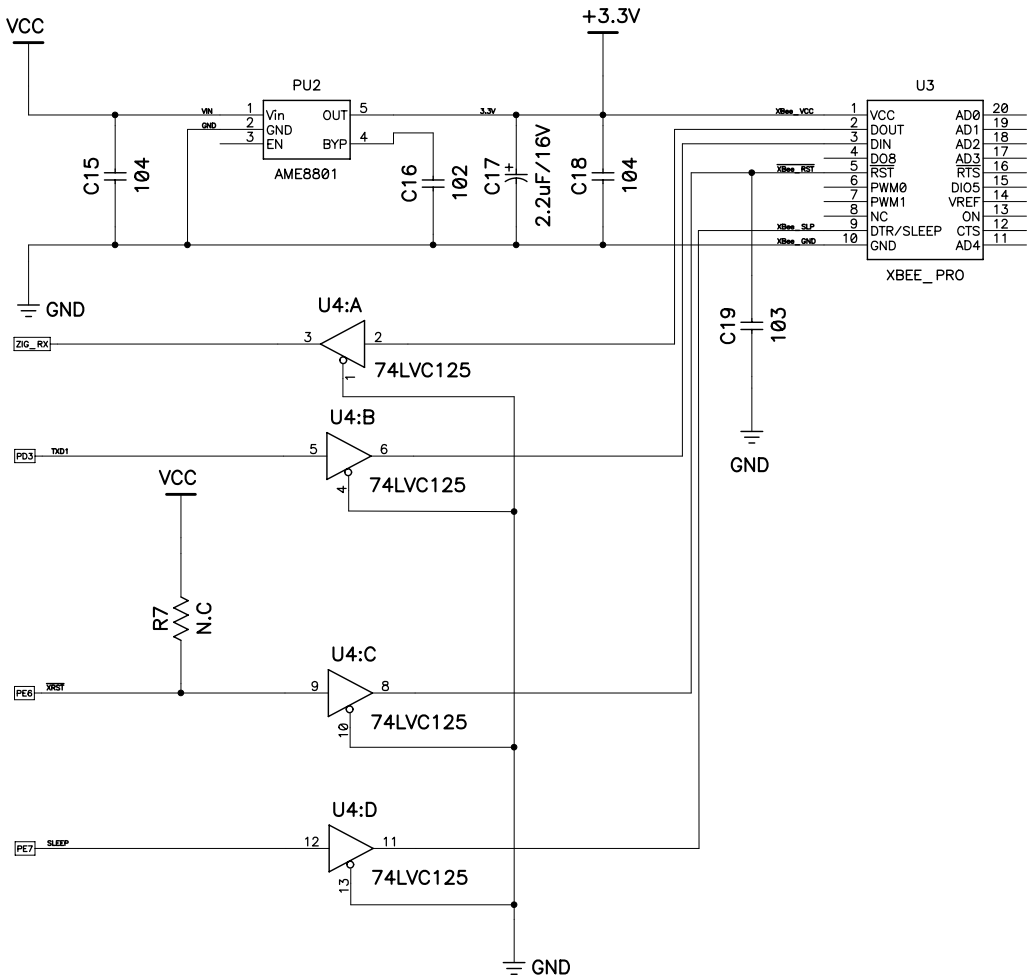

Title	ATMEGA128 Zigbee	
Size	Number 1	Rev 1.0
Date Fri Oct 10, 2008	Drawn by cpuplaza	
Filename zigbee.sch	Sheet 2 of 2	